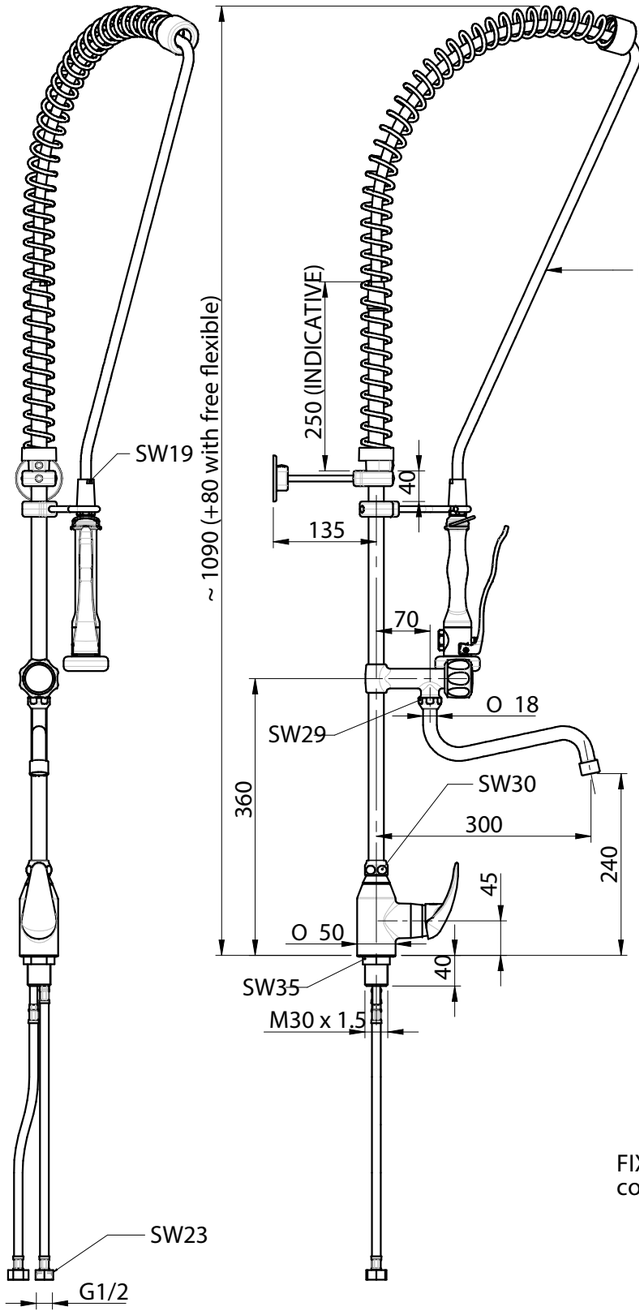

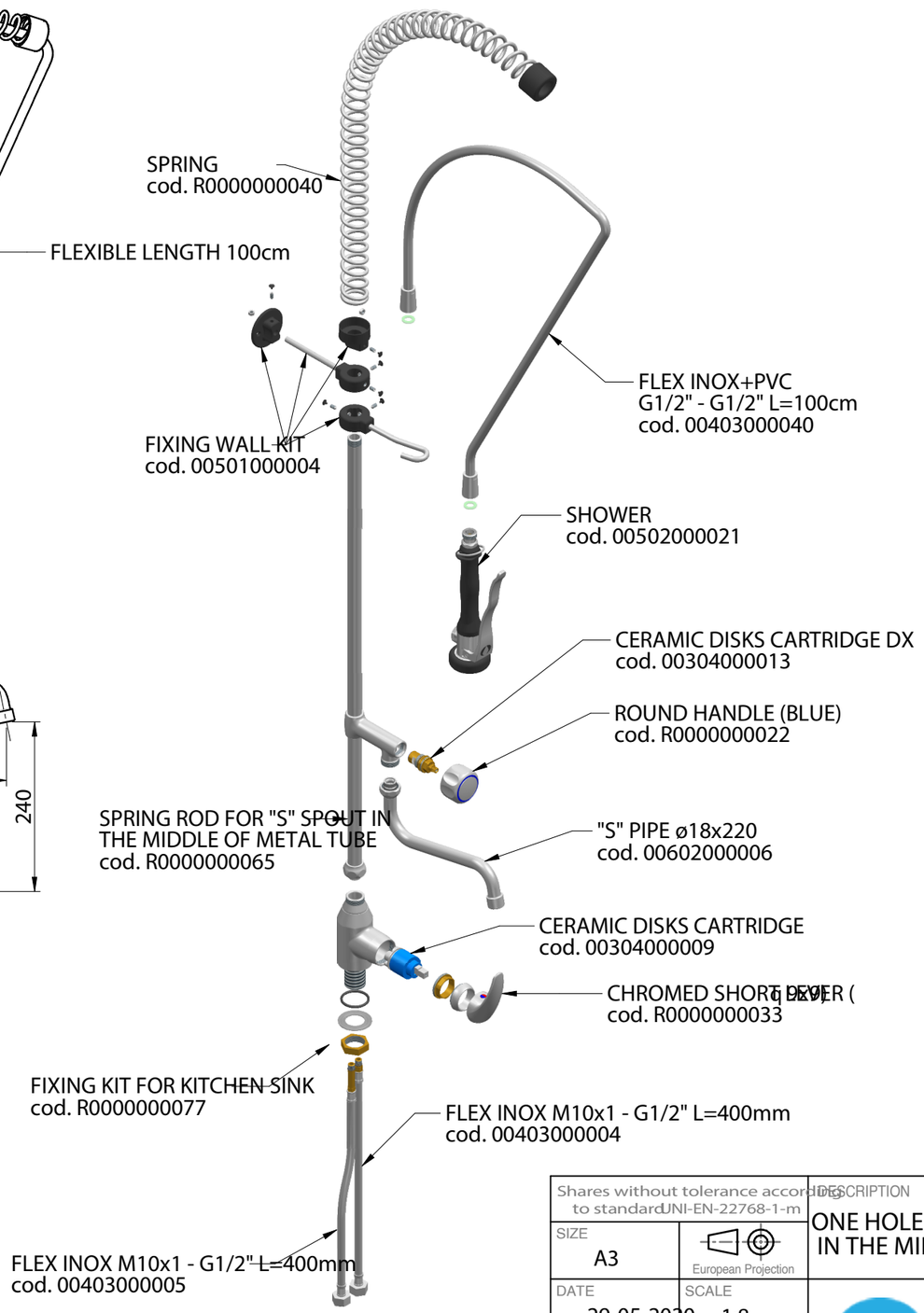

FLOW RATE : 12 L/min at 3,5 BAR only from the show
14 L/min at 3,5 Bar onlly from the spout
18 L/min at 3,5 BAR when both + spout are o

sink fixing hole : ø31 mm

Shares without tolerance according to standard UNI-EN-22768-1-m	DESCRIPTION	CODE P0101020114
SIZE A3	European Projection	ONE HOLE PRE-RINSE UNIT MIXER WITH LEVER HANDLE, SWINGING "S" SPOUT IN THE MIDDLE OF THE TUBE, ROUND HANDLE AND PREMIUM SHOWER HAND
DATE 29-05-2020	SCALE 1:8	WEIGHT 5,60 kg
DRAWN PICCOLO M.		COOLPARTS
VALIDATE PICCOLO M.		VIA DELL'ARTIGIANO 8/F-8-G , 31050 MONASTIER di TREVISO (TV) tel: 0422 842157 - fax: 0422 708978

DONE WITH DESIGN CAD - PROHIBITED THE CHANGES MANUAL

Rev. 00