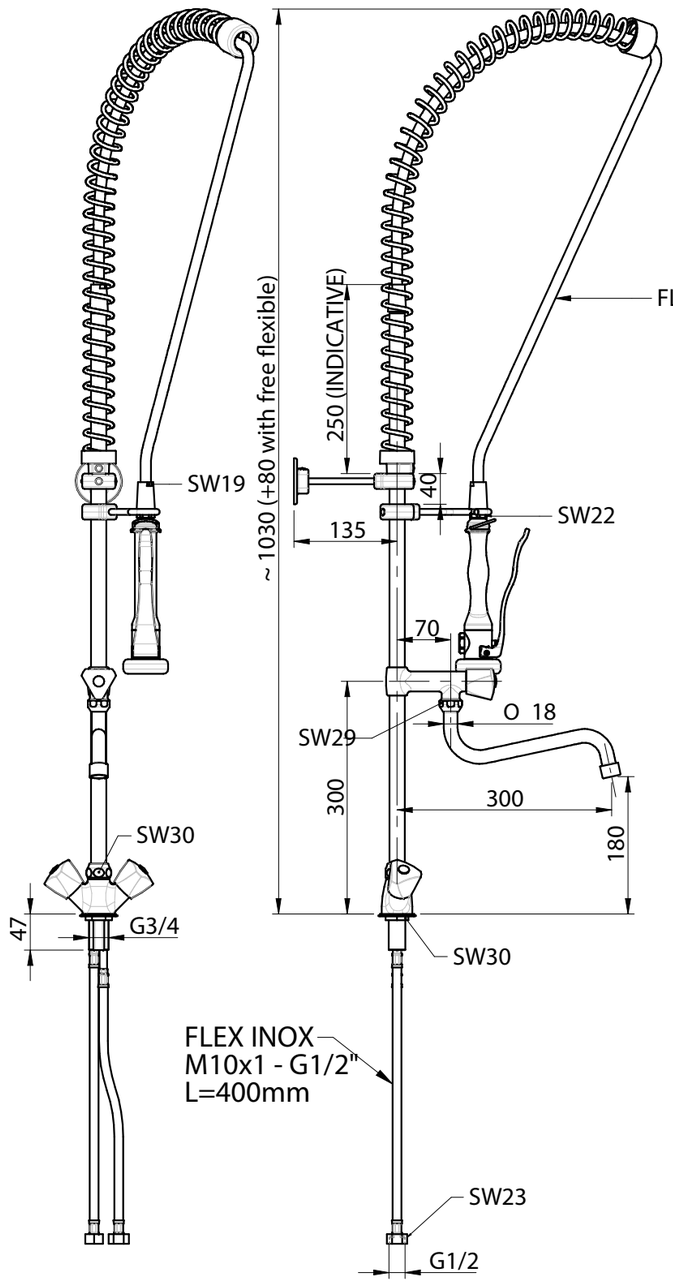

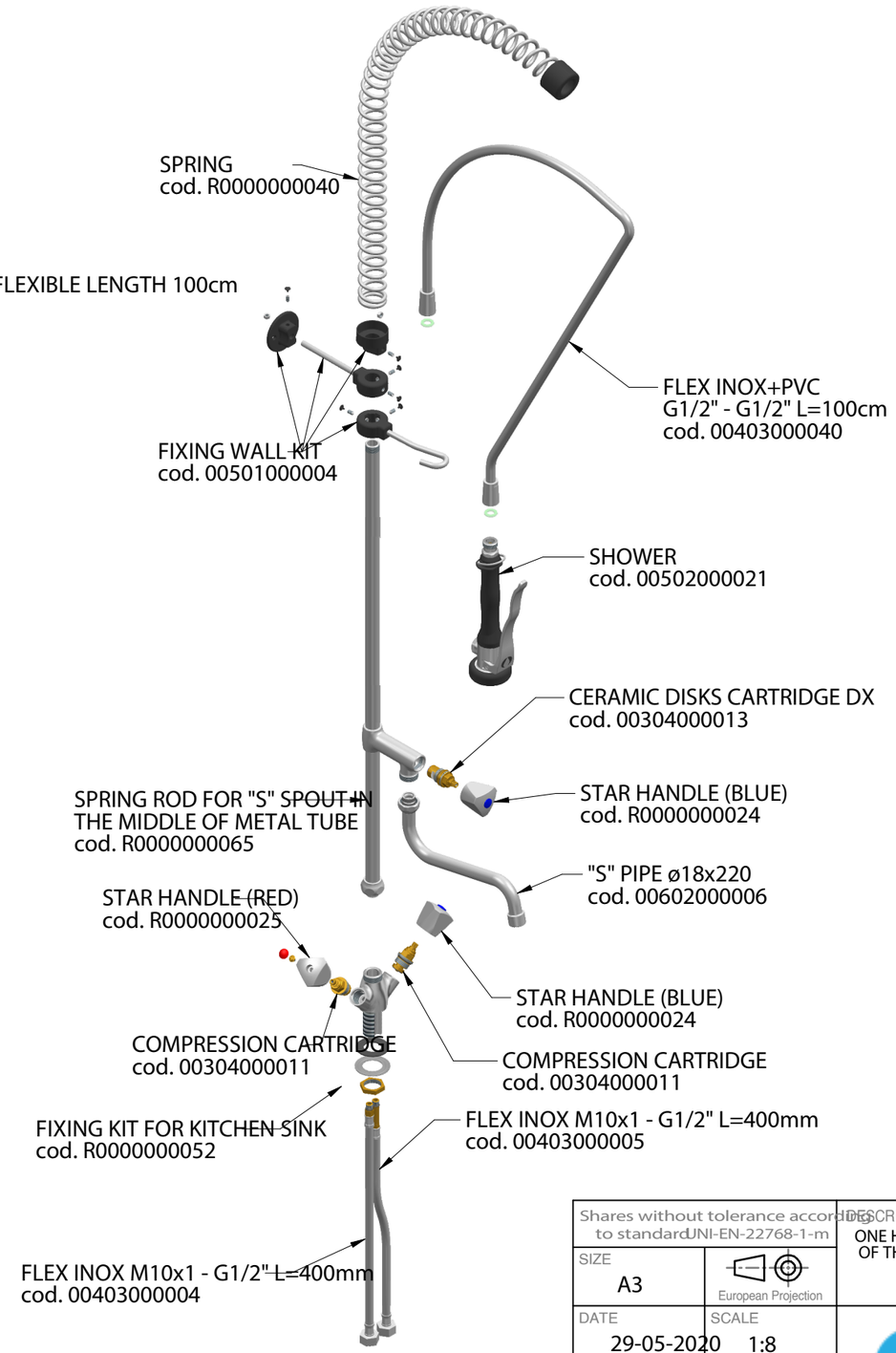

FLOW RATE : 12 L/min at 3,5 BAR only from the shower
14 L/min at 3,5 Bar onlly from the spout
18 L/min at 3,5 BAR when both + spout are open

sink fixing hole : ø27 mm

Shares without tolerance according to standard UNI-EN-22768-1-m	DESCRIPTION ONE HOLE PRE-RINSE UNIT WITH SWINGING "S" SPOUT IN THE MIDDLE OF THE TUBE, CHROMED STAR HANDLE AND PREMIUM SHOWER HAND	CODE P0101020132
SIZE A3	European Projection	WEIGHT 4,65 Kg
DATE 29-05-2020	SCALE 1:8	COOLPARTS
DRAWN PICCOLO M.		
VALIDATE PICCOLO M.		

DONE WITH DESIGN CAD - PROHIBITED THE CHANGES MANUAL

Rev. 00